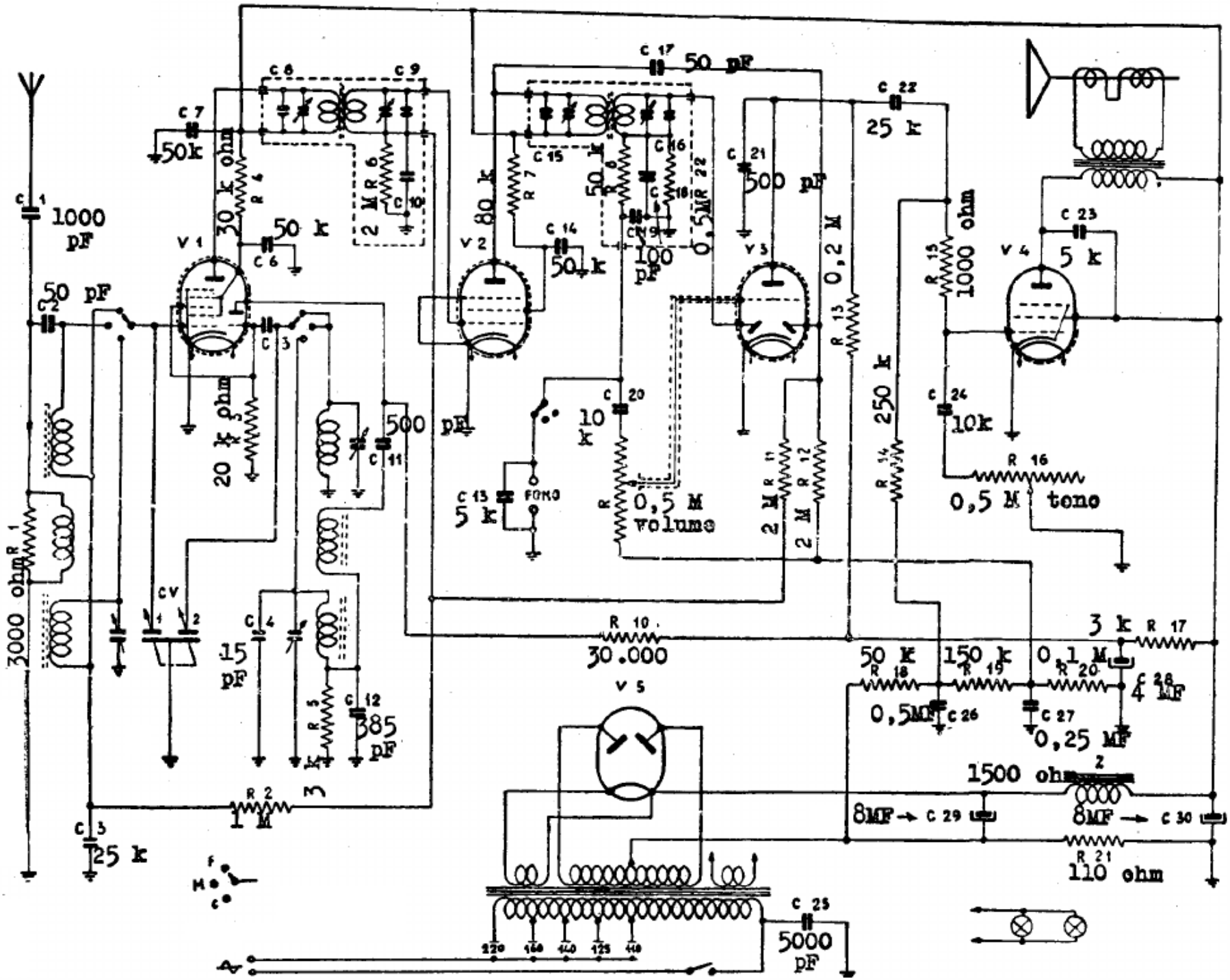

KING'S RADIO MOD. 535 - VIS RADIO Mod. TICINO - MF: 465 kc/s. Tensioni: ECH4 pl. 245, sch. 85, gr. — 2, osc. 100. EF9 pl. 245, sch. 85, gr. — 2,5. EBC3 pl. 90, gr. — 2. EL3 pl. 235, sch. 245, gr. — 5,5 V.